# G26000 26A 12V&24V

Lead Acid: Wet | Gel | MF | EFB | AGM
Lithium: Li-Ion

**Auto | Marine | RV | Powersport | Lawn & Garden**

# UltraSafe® Battery Charger™

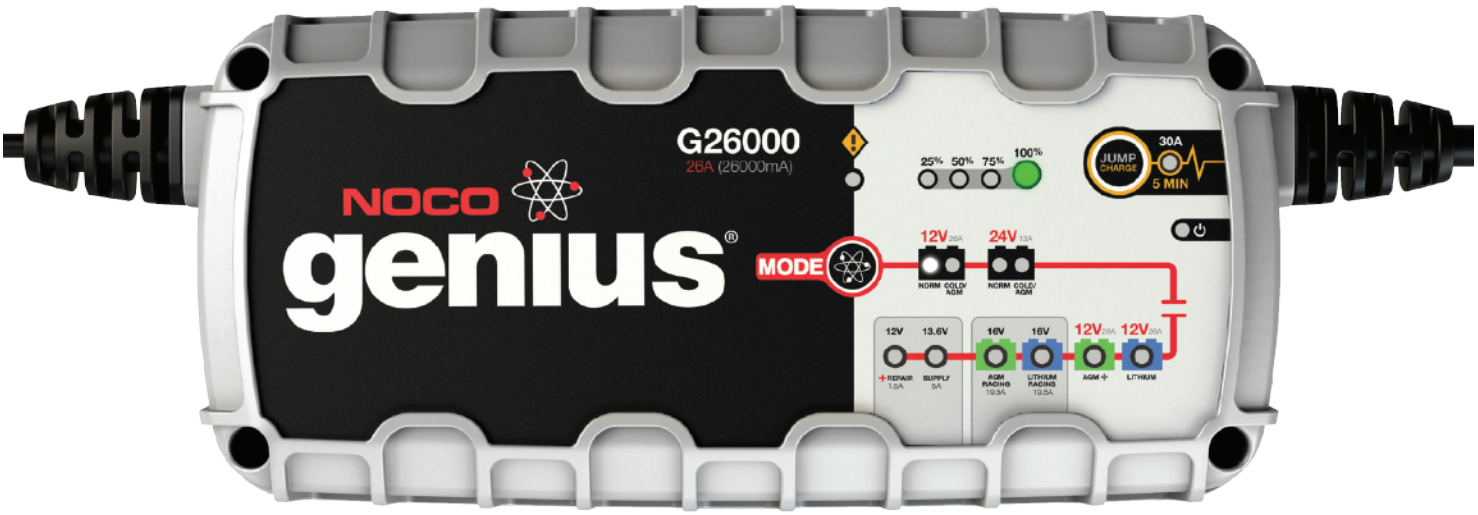


## Charge Fully Drained Batteries Up To **500Ah**.

Cars, Trucks, RVs, Equipment, Tractors, Aircraft, And Other Large Applications.

Ultra-compact, rugged, and portable **UltraSafe®** Smart Charger. Features **spark proof technology** and **reverse polarity protection**. Charges **2X faster** than ordinary chargers. Stay connected 24/7 with **zero overcharge**.

### Start-Stop.
Counteracts increased cyclic energy demands placed on batteries in micro-hybrid vehicles.

### Energy Save.
Minimizes energy consumption when full power is not needed.

### Recovery.
Applies a high-voltage pulse charge when low-voltage, sulfation, or lost capacity is detected.

### Firewall.
Multi-level safety barrier prevents unsafe and abnormal conditions.

### Thermal Monitor.
Internal temperature sensors adjust charge based on ambient climate.

### Rugged.
Dirt, water, UV, impact and crush resistant.

### Optimization.
Stabilizes internal battery chemistry for increased performance and longevity.

### Safe.
Protects against reverse polarity, sparks, over-charging, overcurrent, open-circuits and overheating.

### CANBUS.
Automatically enables the charging port to charge CANBUS systems.

### Load Tracking.
Dynamically changes charge current when a load is placed on the battery.

### Memory.
Returns to last-selected mode when restarted.

### Maintenance Plus.
Keeps the battery fully charged without over-charging, indefinitely.

### Diagnostics.
Intuitive visual diagnostic tool for detecting reverse polarity, low-voltage or damaged batteries.

### Interactive.
Alters the charging process based on organic battery feedback.

### Jump Charge.™
Rapidly charge and start vehicles with drained batteries safely in 5 minutes.

For **12V** Batteries Up To 500Ah. **16V**&**24V** Batteries Up To 250Ah.


The NOCO Company
30339 Diamond Parkway, #102
Glenwillow, OH 44139 | USA
1.800.456.6626


no.co

**NOCO**
**Since 1914**

## Charging Modes

| Mode | Explanation |
|---|---|
| Standby | **No Power**<br>In standby mode, the charger is not charging or providing any power to the battery. Energy Save is activated during this mode, drawing microscopic power from the electrical outlet. When selected, an orange LED will illuminate. |
| 12V NORM | **14.5V \| 26A \| 50-500Ah Batteries**<br>For charging 12-volt Wet Cell, Gel Cell, Enhanced Flooded, Maintenance-Free and Calcium batteries. When selected, a white LED will illuminate. |
| 12V COLD/ AGM | **14.8V \| 26A \| 50-500Ah Batteries**<br>For charging 12-volt batteries in cold temperatures below 50ºF (10ºC) or AGM batteries. When selected, a blue LED will illuminate. |
| 24V NORM | **29V \| 13A \| 25-250Ah Batteries**<br>For charging 24-volt, Wet Cell, Gel Cell, Enhanced Flooded, Maintenance-Free and Calcium batteries. When selected, a white LED will illuminate. |
| 24V COLD/ AGM | **29.6V \|13A \| 25-250Ah Batteries**<br>For charging 24-volt batteries in cold temperatures below 50ºF (10ºC) or AGM batteries. When selected, a blue LED will illuminate. |
| 12V LITHIUM Press & Hold | **14.2V \| 26A \| 50-500Ah Batteries**<br>For charging 12-volt lithium-ion batteries, including lithium iron phosphate. When selected, a blue LED will illuminate. |
| 12V AGM+ Press & Hold | **15.5V \|26A \| 50-500Ah Batteries**<br>For charging 12-volt advanced AGM batties, which requires a higher than normal charging voltage. When selected, a blue LED will illuminate. |
| 16V LITHIUM Press & Hold | **19.45V \| 20A \| 25-250Ah Batteries**<br>For charging 16-volt lithium-ion batteries, including lithium iron phosphate, which are commonly used in racing vehicles. When selected, a blue LED will illuminate. |
| 16V AGM Press & Hold | **19.6V \| 20A \| 25-250Ah Batteries**<br>For charging 16-volt AGM batteries, which are commonly used in racing vehicles. When selected, a blue LED will illuminate. |
| 13.6V SUPPLY Press & Hold | **13.6V \| 5A \| Max 6A**<br>Converts to a DC power supply for powering any 12VDC device, like a tire inflator, oil changer, or as a memory retainer when replacing a battery. When selected, a red LED will illuminate. |
| 12V REPAIR Press & Hold | **16.5V \| 1.5A \|Any Capacity**<br>An advanced battery recovery mode for repairing and storing old damaged, stratified, or sulfated batteries. When selected, a red LED will illuminate and flash. |

## Technical Specifications

| | | | |
|---|---|---|---|
| Input Voltage AC: | 110-120 VAC, 50-60Hz | Type of Batteries: | 12V, 16V & 24V |
| Working Voltage AC: | 85-130 VAC, 50-60Hz | Battery Chemistries: | Wet, Gel, MR, CA, EFB, AGM, LIB |
| Efficiency: | 85% Approx. | Battery Capacity: | 50-500Ah (12V), 25-250Ah (24V), Maintains All Battery Sizes |
| Power: | 443W Max | | |
| Low-Voltage Detection: | 2V (12V), 2V (16V), 14V (24V) | Housing Protection: | IP44 |
| Back Current Drain: | <5mA | Cooling: | Fan Cooled |
| Ambient Temperature: | 0°C to +40°C | Dimensions (LxWxH): | 12.13 x 5.7 x 3.07 Inches |
| Charger Type: | 8 Step, Smart Charger | Weight: | 5.09 Pounds |

## Charging Steps

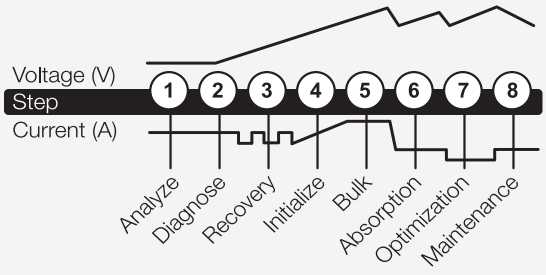

## What's In The Box

- G26000 Smart Charger
- Battery Clamp Connectors w/ Integrated Eyelets
- User Guide and Information Guide & Warranty

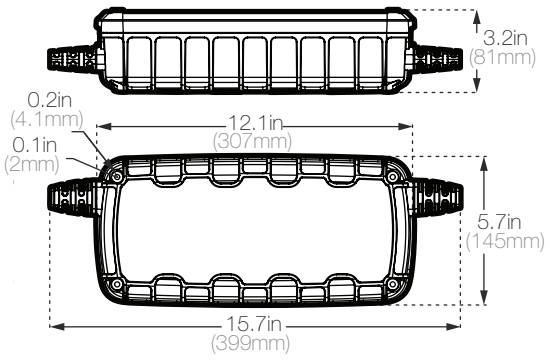


AC Cable: 75 in DC Cable: 56 in

**Retail Packaging:**
Dimensions: 8.94"x5.12"x18.94"
Weight: 7.87lbs
UPC: 0-46221-10035-8
**Inner Carton:**
Dimensions: 9.45"x5.63"x19.61"
Weight: 8.20lbs

**Master Carton:**
Dimensions: 20.08"x12.4"x20.55"
Weight: 34.59lbs
Quantity: 4
UCC: 10046221100355
**Units Per Pallet:** 72 Units

Intertek
4001276

CONFORMS TO UL STD. UL1236
CERTIFIED TO CSA STD. C22.2 No.107.2


The NOCO Company
30339 Diamond Parkway, #102
Glenwillow, OH 44139 | USA
1.800.456.6626


no.co

NOCO
Since 1914